then

Printing in 3D

Envisioned as a potential method for manufacturing since the 1940s, 3D printing saw technological success only several decades later.

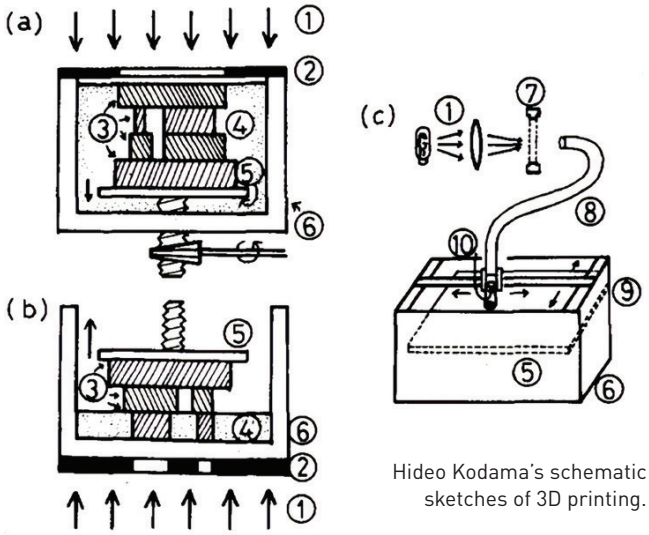

Hideo Kodama's schematic sketches of 3D printing.

Reprinted from H. Kodama. Rev. Sci. Instrum. **52**, 1770 (1981), with the permission of AIP Publishing

1940s–80s: An idea matures

While the concept of 3D printing was proposed by sci-fi writer Murray Leinster in 1945, more concrete schemes started to appear in the 1970s. These included a 1974 *New Scientist* column by David Jones that described what's now known as the stereolithography process. Most designs, however, couldn't be brought to life due to a lack of funding. Even so, Hideo Kodama filed a patent in 1981 for a laser-beam-curing process that's listed in *Guinness World Records* as the first written account of a working 3D printer.

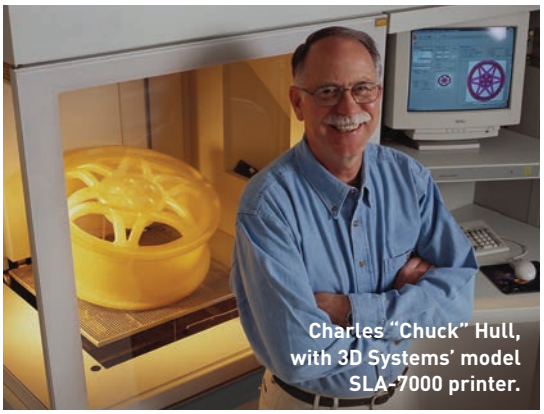

Charles "Chuck" Hull, with 3D Systems' model SLA-7000 printer.

Image courtesy of 3D Systems

1980s: Becoming a reality

The lack of commercially viable machine didn't deter inventors from filing additional patents. Finally, the seed for a successful apparatus was planted when Charles "Chuck" Hull 3D-printed a part using stereolithography in 1983 and subsequently filed a stereolithography-machine patent the following year. In 1986, he cofounded 3D Systems, which became the world's first 3D-printing company and which, the next year, released the SLA-1—the first commercially available 3D printer.

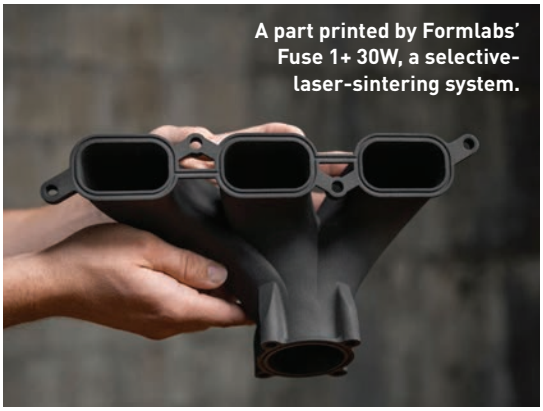

A part printed by Formlabs' Fuse 1+ 30W, a selective-laser-sintering system.

Formlabs

1990s: The options multiply

Following the success of stereolithography, other companies started unveiling different approaches to 3D printing—such as solid-ground curing and laminated-object manufacturing. One technique that emerged, selective laser sintering, fuses powdered materials using heat from a laser. While the need for a high-power light source limits the technique's use at home, it has been widely used in industries for manufacturing machine parts.

Everything and Everywhere

Now that 3D printing is more widely available, it is being used for everything from coral conservation to nanoscale printing to making parts for particle accelerators.

3D printing frames to aid coral restoration.

© 2021 KAUST / A. Serin

2021: Assisting coral growth

Ocean warming, pollution and other factors have hit the world's coral-reef population hard. To help in reef restoration efforts, researchers in Saudi Arabia proposed using 3D printing with calcium carbonate photo-initiated ink to build surfaces for coral to grow on. According to the researchers, the printed structure removes the need for corals to build limestone skeletons themselves, promoting faster coral growth.

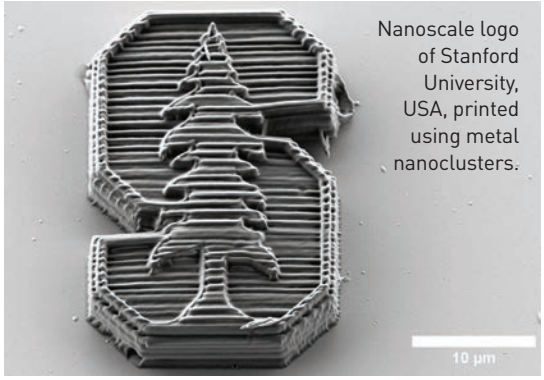

Nanoscale logo of Stanford University, USA, printed using metal nanoclusters.

J. Kulikowski

2022: Scaling down

Despite rapid advances, 3D-printing techniques still have their limitations at very small scales. In a study published last year, researchers in the United States reported improving two-photon 3D printing with atomic metal clusters. With the new material, the team could create strong, lightweight nanoscale lattice structures that might someday provide improved protection for fragile satellites, drones and microelectronics.

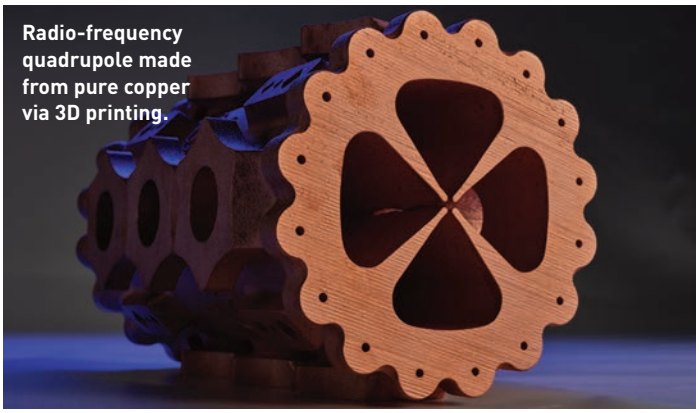

Radio-frequency quadrupole made from pure copper via 3D printing.

CERN

2022: Future particle accelerator components

For particle accelerators to become more accessible, their size and manufacturing cost need to be reduced. As part of a project coordinated by CERN, the industrial-laser and machine-tool firm Trumpf 3D-printed a core component of particle accelerators—a radio-frequency quadrupole. The engineers could produce the high-precision part with pure copper thanks to a highly energetic green laser beam. The team expects 3D-printed components to be widely used in the future throughout the accelerator community.

BIOPRINTED ORGANS?: Nonliving objects are not the only items that can be 3D printed. In 2022, a research team based in Europe reported fabricating 3D structures possessing liver-like functions via volumetric bioprinting using patterned visible light and organoid-laden gelatin hydrogels. According to the team, the technology opens up new possibilities for regenerative medicine and personalized drug testing.

For references and further resources, go online: **optica-opn.org/then-now/3d-printing**.

References and Resources

- H.I. Albalawi et al. "Sustainable and Eco-Friendly Coral Restoration through 3D Printing and Fabrication," ACS Sustainable Chem. Eng. **9**, 12634 (2021).
- P.N. Bernal et al. "Volumetric Bioprinting of Organoids and Optically Tuned Hydrogels to Build Liver-Like Metabolic Biofactories," Adv. Mater. **34**, 2110054 (2022).
- Q. Li et al. "Mechanical nanolattices printed using nanocluster-based photoresists," Science **378**, 768 (2022).
- J. Haines. "History of 3D Printing: When Was 3D Printing Invented?," all3dp.com, 29 April 2022.
- "TRUMPF manufactures core component for particle accelerator for CERN-coordinated I.FAST project," trumpf.com, 10 November 2022.
- A. Le Gall. "First 3D printing of crucial component to bring accelerators closer to society," home.cern, 18 November 2022.
- "First written account of a working 3D printer," guinnessworldrecords.com
- "Our Story," 3dsystems.com
- "Guide to Selective Laser Sintering (SLS) 3D Printing," formlabs.com